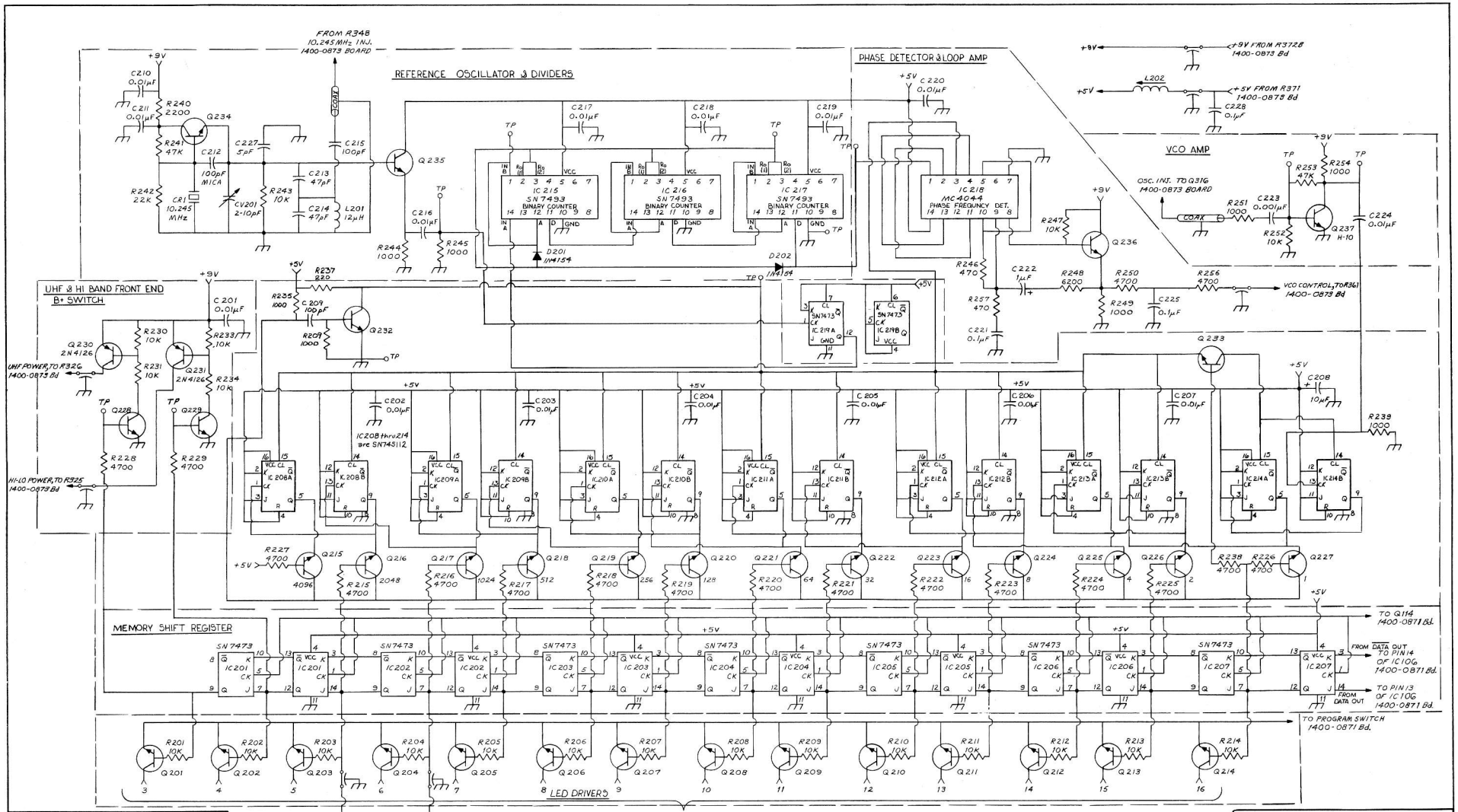

REV.	ECN NO.	DATE	BY
8	74-106	R.C.S.	10-17-74
7	74-91	R.C.S.	10-2-74
6	74-87	R.C.S.	10-2-74
5	74-86	R.C.S.	10-2-74
4	74-73	R.C.S.	10-2-74
3	74-72	R.C.S.	10-2-74
2	74-63	R.C.S.	8-13-74
1	74-53	R.C.S.	7-23-74

REVISIONS

9/ 75-27 DLR 3/3/75

REMOVED

C201 thru C228 C226
D201 " D202
IC201 " IC219
Q201 " Q237
R201 " R257 R258, 255
L201 " L202
CV201

NOTES
1. All transistors are 2N4124 unless otherwise noted.
2. All feedthru capicitors are 1000pF
3. IC 208 THRU IC 214 SN74S112

TENNELEC
P. O. BOX D, OAK RIDGE, TENNESSEE 37830

TITLE: MS-1 LOGIC CIRCUIT DIAGRAM 1400-0872 BD.

ENGINEER P. FRLASTERER	DATE	ENG. APPROVAL	DATE
DRAFTSMAN C. COFFEY 7-25-74	DATE	DRAFTING APPROVAL	DATE
SCALE		RELEASED BY	DATE

PART NO.
DRAWING NO. MS-1-0872-10

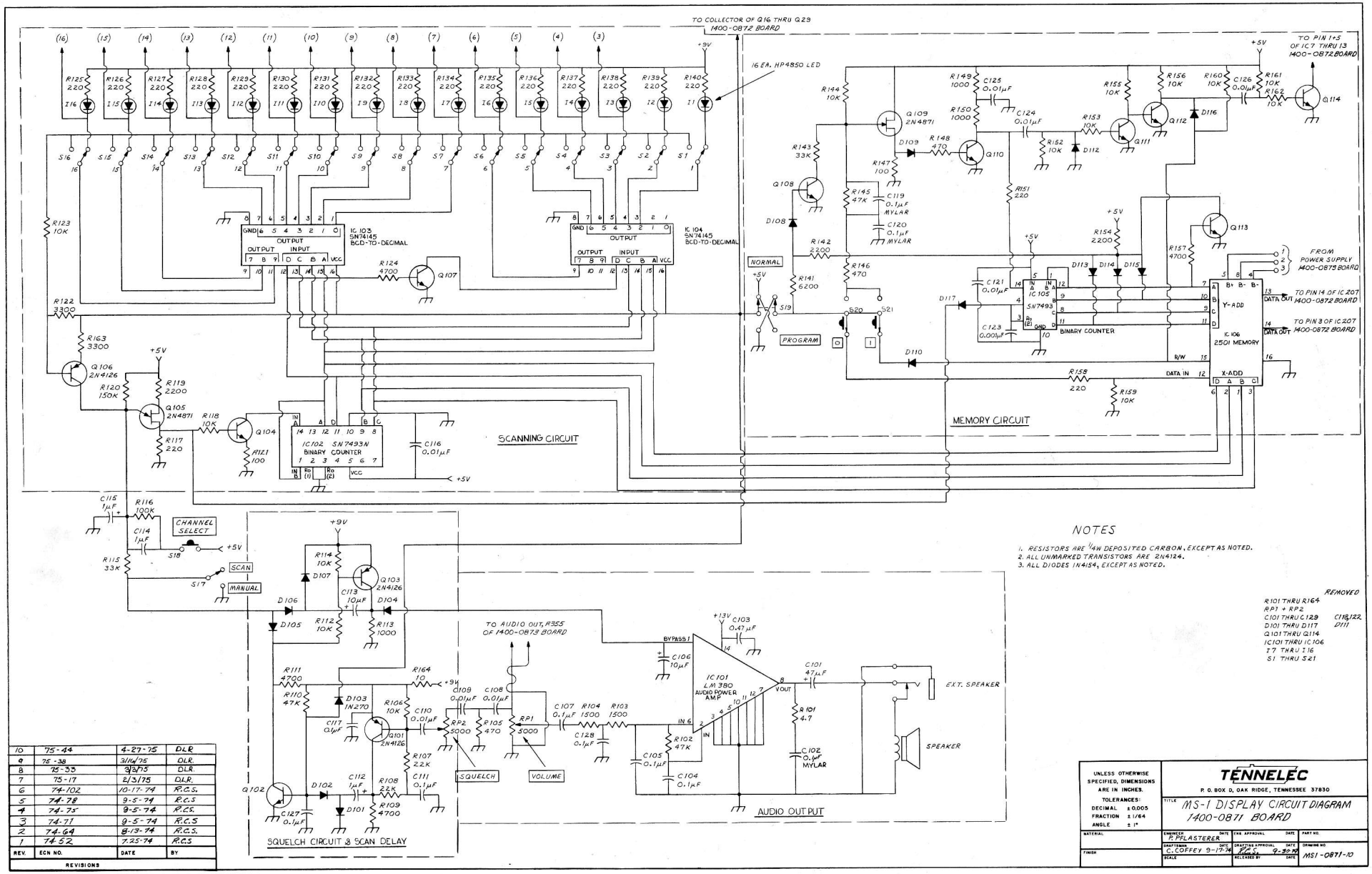

NOTES

1. RESISTORS ARE 1/4W DEPOSITED CARBON, EXCEPT AS NOTED.
2. ALL UNMARKED TRANSISTORS ARE 2N4124.
3. ALL DIODES 1N4154, EXCEPT AS NOTED.

REMOVED

R101 THRU R164
RP1 + RP2
C101 THRU C129 — C118,122
D101 THRU D117 — D111
Q101 THRU Q114
IC101 THRU IC106
I7 THRU I16
S1 THRU S21

REV.	ECN NO.	DATE	BY
10	75-44	4-27-75	D.L.R.
9	75-38	3/14/75	D.L.R.
8	75-33	3/3/75	D.L.R.
7	75-17	2/3/75	D.L.R.
6	74-102	10-17-74	R.C.S.
5	74-78	9-5-74	R.C.S
4	74-75	9-5-74	R.C.S.
3	74-71	9-5-74	R.C.S
2	74-64	8-13-74	R.C.S.
1	74-52	7.25-74	R.C.S

REVISIONS

UNLESS OTHERWISE SPECIFIED, DIMENSIONS ARE IN INCHES.
TOLERANCES:
DECIMAL ±0.005
FRACTION ±1/64
ANGLE ±1°

MATERIAL
FINISH

TENNELEC
P. O. BOX D, OAK RIDGE, TENNESSEE 37830

TITLE: MS-1 DISPLAY CIRCUIT DIAGRAM 1400-0871 BOARD

ENGINEER: P. PFLASTERER — DATE
ENG APPROVAL — DATE
PART NO.
DRAFTSMAN: C. COFFEY 9-17-74 — DATE
DRAFTING APPROVAL — DATE
DRAWING NO.
SCALE
RELEASED BY — DATE
MS1-0871-10

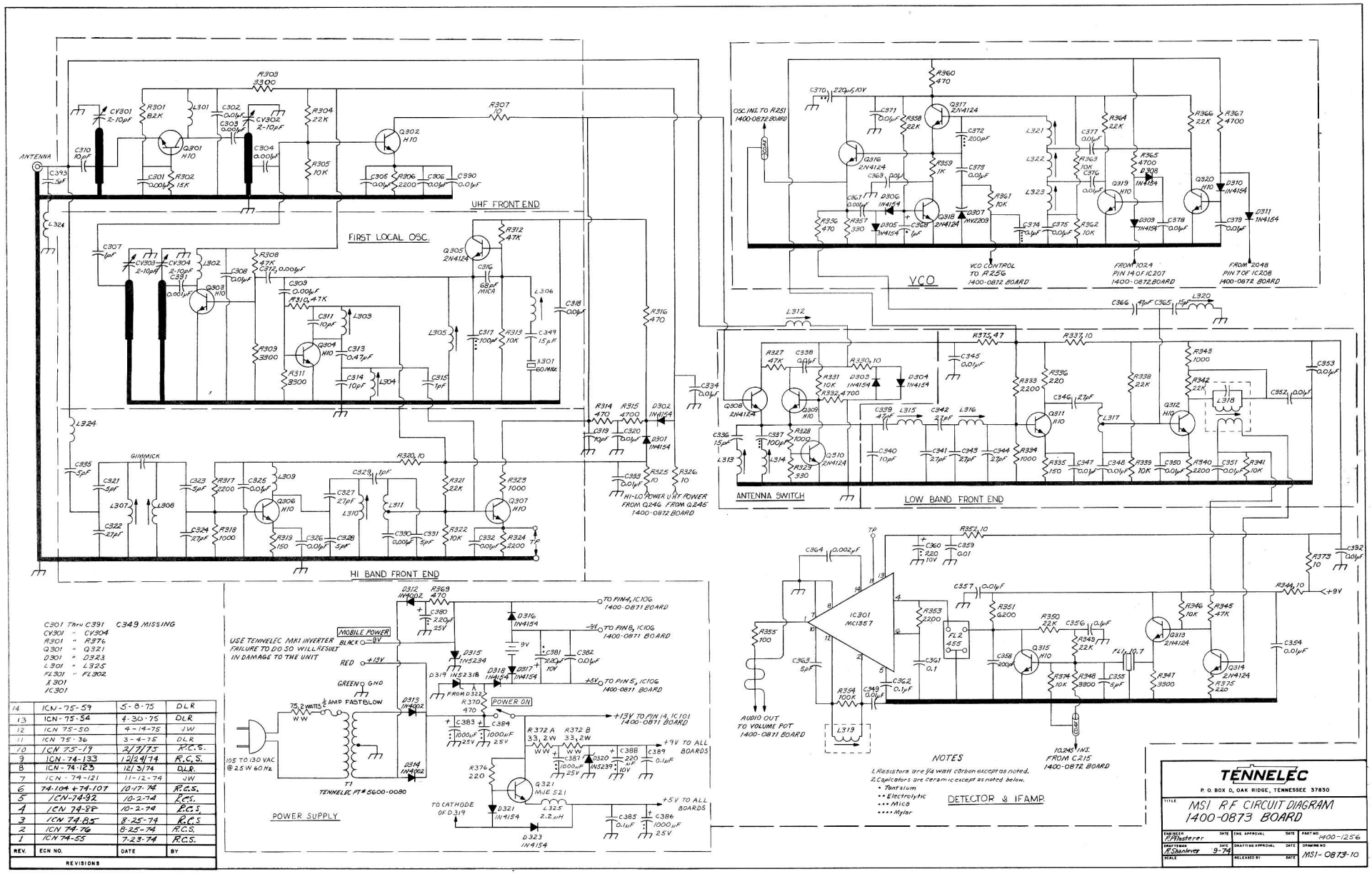

NOTES

1. Resistors are 1/4 watt carbon except as noted.
2. Capacitors are ceramic except as noted below.
- * Tantalum
- ** Electrolytic
- *** Mica
- **** Mylar

REV.	ECN NO.	DATE	BY
14	ICN-75-59	5-8-75	DLR
13	ICN-75-54	4-30-75	DLR
12	ICN 75-50	4-14-75	JW
11	ICN 75-36	3-4-75	DLR
10	ICN 75-17	2/7/75	R.C.S.
9	ICN-74-133	12/24/74	R.C.S.
8	ICN-74-123	12/3/74	DLR
7	ICN-74-121	11-12-74	JW
6	74-104 + 74-107	10-17-74	R.C.S.
5	ICN-74-92	10-2-74	R.C.S.
4	ICN 74-88	10-2-74	R.C.S.
3	ICN 74-85	8-25-74	R.C.S.
2	ICN 74-76	8-25-74	R.C.S.
1	ICN 74-55	7-23-74	R.C.S.

REVISIONS

TENNELEC

P. O. BOX D, OAK RIDGE, TENNESSEE 37830

TITLE: MSI RF CIRCUIT DIAGRAM 1400-0873 BOARD

ENGINEER: R.A. Masterer	DATE	ENG. APPROVAL	DATE	PART NO. 1400-1256
DRAFTSMAN: R. Chambers	DATE 9-74	DRAFTING APPROVAL	DATE	DRAWING NO. MSI-0873-10
SCALE		RELEASED BY	DATE	